How to compute a derivative

Computing derivatives of complicated functions

- How do you compute the derivatives in an LSTM or GRU cell?
- How do you compute derivatives of complicated functions *in general*
- In these slides we will give you some hints
- In the slides we will assume vector functions and vector activations
- But we will also give you scalar versions of the equations to provide intuition
- The two sets will be almost identical, except that when we deal with vector functions
  - The notation becomes uglier and less intuitive
  - We must ensure that the dimensions come out right
- Please compare vector versions of equations to their scalar counterparts for better intuition, if needed

First: Some notation and conventions

- We will refer to the derivative of scalar L with respect to x as $\nabla_x L$
  - Regardless of whether the derivative is a scalar, vector, matrix or tensor
- The derivative of a scalar L w.r.t an $N \times 1$ column vector x is a $1 \times N$ row vector $\nabla_x L$
- The derivative of a scalar L w.r.t an $N \times M$ matrix X is an $M \times N$ matrix $\nabla_X L$
  - Remember our gradient update rule : $W = W - \eta \nabla_W L^T$
- The derivative of an $N \times 1$ vector Y w.r.t an $M \times 1$ vector X is an $N \times M$ matrix $J_X(Y)$
  - The Jacobian

Rules: 1 (scalar)

$$z = Wx$$

- All terms are scalars
- $\frac{\partial L}{\partial z}$ is known

$$\frac{\partial L}{\partial x} = \frac{\partial L}{\partial z} W$$

$$\frac{\partial L}{\partial W} = x \frac{\partial L}{\partial z}$$

Rules: 1 (vector)

$$z = Wx$$

- z is an $N \times 1$ vector
- x is an $M \times 1$ vector
- W is an $N \times M$ matrix
- L is a function of z
- $\nabla_z L$ is known (and is a $1 \times N$ vector)

$$\nabla_x L = (\nabla_z L)W$$

$$\nabla_W L = x(\nabla_z L)$$

Please verify that the dimensions match!

Rules: 2 (vector, *schur* multiply)

$$z = x \circ y$$

- x, y and z are all $N \times 1$ vectors
- "$\circ$" represents component-wise multiplication
- $\nabla_z L$ is known (and is a $1 \times N$ vector)

$$\nabla_x L = (\nabla_z L) \circ y^T$$

$$\nabla_y L = (\nabla_z L) \circ x^T$$

Please verify that the dimensions match!

Rules: 3 (scalar)

$$z = x + y$$

- All terms are scalars
- $\frac{\partial L}{\partial z}$ is known

$$\frac{\partial L}{\partial x} = \frac{\partial L}{\partial z}$$

$$\frac{\partial L}{\partial y} = \frac{\partial L}{\partial z}$$

Rules: 3 (vector)

$$z = x + y$$

- x, y and z are all $N \times 1$ vectors
- $\nabla_z L$ is known (and is a $1 \times N$ vector)

$$\nabla_x L = \nabla_z L$$

$$\nabla_y L = \nabla_z L$$

Please verify that the dimensions match!

Rules: 4 (scalar)

$$z = g(x)$$

- x and z are scalars
- $\frac{\partial L}{\partial z}$ is known

$$\frac{\partial L}{\partial x} = \frac{\partial L}{\partial z} g'(x)$$

Rules: 4 (vector)

$$z = g(x)$$

- x and z are $N \times 1$ vectors
- $\nabla_z L$ is known (and is a $1 \times N$ vector)
- $J_x g$ is the *Jacobian* of $g(x)$ with respect to x
  - May be a diagonal matrix

$$\nabla_x L = \nabla_z L \, J_x g$$

Please verify that the dimensions match!

Rules: 4b (vector) component-wise multiply notation

$$z = g(x)$$

- x and z are $N \times 1$ vectors
- $\nabla_z L$ is known (and is a $1 \times N$ vector)
- $g(x)$ is actually a vector of *component-wise* functions
  - i.e. $z_i = g(x_i)$
- $g'(x)$ is a column vector consisting of the derivatives of the individual components of $g(x)$ w.r.t individual components of x

$$\nabla_x L = \nabla_z L \circ g'(x)^T$$

Please verify that the dimensions match!

Rule 5: Addition of derivatives

- Given two variables

$$z = g(x)$$
$$y = h(x)$$

- And given $\frac{\partial L}{\partial y}$ and $\frac{\partial L}{\partial z}$
- we get

$$\frac{\partial L}{\partial x} = \frac{\partial L}{\partial z} g'(x) + \frac{\partial L}{\partial y} h'(x)$$

- The rule also extends to vector derivatives

Computing derivatives of complex functions

- We now are prepared to compute very complex derivatives
- Procedure:
  - Express the computation as a series of computations of intermediate values
  - Each computation must comprise either a unary or binary relation
    - Unary relation: RHS has one argument, e.g. $y = g(x)$
    - Binary relation: RHS has two arguments
      e.g. $z = x + y$ or $\mathrm{z} = xy$
  - Work your way backward through the derivatives of the simple relations

Example: LSTM

- Full set of LSTM equations (in the order in which they must be computed)

1 $$f_t = \sigma\left(W_f \cdot [\boldsymbol{C_{t-1}}, h_{t-1}, x_t] \ + \ b_f\right)$$

2 $$i_t = \sigma\left(W_i \cdot [\boldsymbol{C_{t-1}}, h_{t-1}, x_t] \ + \ b_i\right)$$

3 $$\tilde{C}_t = \tanh(W_C \cdot [h_{t-1}, x_t] \ + \ b_C)$$

4 $$C_t = f_t * C_{t-1} + i_t * \tilde{C}_t$$

5 $$o_t = \sigma\left(W_o \cdot [\boldsymbol{C_t}, h_{t-1}, x_t] \ + \ b_o\right)$$

6 $$h_t = o_t * \tanh\left(C_t\right)$$

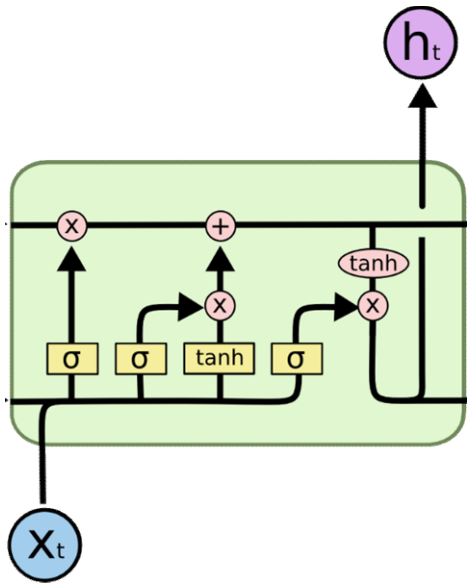

- Its actually much cleaner to separate the individual components, so lets do that first

LSTM

1. $f_t = \sigma(W_{fC}C_{t-1} + W_{fh}h_{t-1} + W_{fx}x_t + b_f)$
2. $i_t = \sigma(W_{iC}C_{t-1} + W_{ih}h_{t-1} + W_{ix}x_t + b_i)$
3. $\tilde{C}_t = \sigma(W_{Ch}h_{t-1} + W_{Cx}x_t + b_C)$
4. $C_t = f_t \circ C_{t-1} + i_t \circ \tilde{C}_t$
5. $o_t = \sigma(W_{oC}C_{t-1} + W_{oh}h_{t-1} + W_{ox}x_t + b_o)$
6. $h_t = o_t \circ \tanh(C_t)$

- This is the full set of equations *in the order in which they must be computed*
- Lets rewrite these in terms of unary and binary operations

LSTM

1. $\boxed{f_t = \sigma(W_{fC}C_{t-1} + W_{fh}h_{t-1} + W_{fx}x_t + b_f)}$
2. $i_t = \sigma(W_{iC}C_{t-1} + W_{ih}h_{t-1} + W_{ix}x_t + b_i)$
3. $\tilde{C}_t = \sigma(W_{Ch}h_{t-1} + W_{Cx}x_t + b_C)$
4. $C_t = f_t \circ C_{t-1} + i_t \circ \tilde{C}_t$
5. $o_t = \sigma(W_{oC}C_{t-1} + W_{oh}h_{t-1} + W_{ox}x_t + b_o)$
6. $h_t = o_t \circ \tanh(C_t)$

$$\boxed{\begin{array}{c} z_1 = W_{fC}C_{t-1} \\ z_2 = W_{fh}h_{t-1} \\ z_3 = z_1 + z_2 \\ z_4 = W_{fx}x_t \\ z_5 = z_3 + z_4 \\ z_6 = z_5 + b_f \\ f_t = \sigma(z_6) \end{array}}$$

- Lets rewrite these in terms of unary and binary operations

LSTM

1. $z_1 = W_{fC} C_{t-1}$
2. $z_2 = W_{fh} h_{t-1}$
3. $z_3 = z_1 + z_2$
4. $z_4 = W_{fx} x_t$
5. $z_5 = z_3 + z_4$
6. $z_6 = z_5 + b_f$
7. $f_t = \sigma(z_6)$

LSTM

1. $f_t = \sigma(W_{fC}C_{t-1} + W_{fh}h_{t-1} + W_{fx}x_t + b_f)$
2. $\boxed{i_t = \sigma(W_{iC}C_{t-1} + W_{ih}h_{t-1} + W_{ix}x_t + b_i)}$
3. $\tilde{C}_t = \sigma(W_{Ch}h_{t-1} + W_{Cx}x_t + b_C)$
4. $C_t = f_t \circ C_{t-1} + i_t \circ \tilde{C}_t$
5. $o_t = \sigma(W_{oC}C_{t-1} + W_{oh}h_{t-1} + W_{ox}x_t + b_o)$
6. $h_t = o_t \circ \tanh(C_t)$

$$\boxed{\begin{array}{c} z_7 = W_{iC}C_{t-1} \\ z_8 = W_{ih}h_{t-1} \\ z_9 = z_7 + z_8 \\ z_{10} = W_{ix}x_t \\ z_{11} = z_9 + z_{10} \\ z_{12} = z_{11} + b_i \\ i_t = \sigma(z_{12}) \end{array}}$$

- Lets rewrite these in terms of unary and binary operations

LSTM

1. $z_1 = W_{fC} C_{t-1}$
2. $z_2 = W_{fh} h_{t-1}$
3. $z_3 = z_1 + z_2$
4. $z_4 = W_{fx} x_t$
5. $z_5 = z_3 + z_4$
6. $z_6 = z_5 + b_f$
7. $f_t = \sigma(z_6)$
8. $z_7 = W_{iC} C_{t-1}$
9. $z_8 = W_{ih} h_{t-1}$
10. $z_9 = z_7 + z_8$
11. $z_{10} = W_{ix} x_t$
12. $z_{11} = z_9 + z_{10}$
13. $z_{12} = z_{11} + b_i$
14. $i_t = \sigma(z_{12})$

LSTM

1. $f_t = \sigma(W_{fC}C_{t-1} + W_{fh}h_{t-1} + W_{fx}x_t + b_f)$
2. $i_t = \sigma(W_{iC}C_{t-1} + W_{ih}h_{t-1} + W_{ix}x_t + b_i)$
3. $\boxed{\tilde{C}_t = \sigma(W_{Ch}h_{t-1} + W_{Cx}x_t + b_C)}$
4. $C_t = f_t \circ C_{t-1} + i_t \circ C_t$
5. $o_t = \sigma(W_{oC}C_{t-1} + W_{oh}h_{t-1} + W_{ox}x_t + b_o)$
6. $h_t = o_t \circ \tanh(C_t)$

$$\boxed{\begin{aligned} z_{13} &= W_{Ch}h_{t-1} \\ z_{14} &= W_{Cx}x_t \\ z_{15} &= z_{13} + z_{14} \\ z_{16} &= z_{15} + b_C \\ \tilde{C}_t &= \sigma(z_{16}) \end{aligned}}$$

- Lets rewrite these in terms of unary and binary operations

LSTM

15. $z_{13}=W_{Ch}h_{t-1}$
16. $z_{14}=W_{Cx}x_t$
17. $z_{15}=z_{13}+z_{14}$
18. $z_{16}=z_{15}+b_C$
19. $\tilde{C}_t=\sigma(z_{16})$

LSTM

1. $f_t = \sigma(W_{fC}C_{t-1} + W_{fh}h_{t-1} + W_{fx}x_t + b_f)$
2. $i_t = \sigma(W_{iC}C_{t-1} + W_{ih}h_{t-1} + W_{ix}x_t + b_i)$
3. $\tilde{C}_t = \sigma(W_{Ch}h_{t-1} + W_{Cx}x_t + b_C)$
4. $\boxed{C_t = f_t \circ C_{t-1} + i_t \circ \tilde{C}_t}$
5. $o_t = \sigma(W_{oC}C_{t-1} + W_{oh}h_{t-1} + W_{ox}x_t + b_o)$
6. $h_t = o_t \circ \tanh(C_t)$

$z_{17} = f_t \circ C_{t-1}$
$z_{18} = i_t \circ \tilde{C}_t$
$C_t = z_{17} + z_{18}$

- Lets rewrite these in terms of unary and binary operations

LSTM

15. $z_{13}=W_{Ch}h_{t-1}$
16. $z_{14}=W_{Cx}x_t$
17. $z_{15}=z_{13}+z_{14}$
18. $z_{16}=z_{15}+b_C$
19. $\tilde{C}_t=\sigma(z_{16})$
20. $z_{17}=f_t \circ C_{t-1}$
21. $z_{18}=i_t \circ \tilde{C}_t$
22. $C_t=z_{17}+z_{18}$

LSTM

1. $f_t = \sigma(W_{fC}C_{t-1} + W_{fh}h_{t-1} + W_{fx}x_t + b_f)$
2. $i_t = \sigma(W_{iC}C_{t-1} + W_{ih}h_{t-1} + W_{ix}x_t + b_i)$
3. $\tilde{C}_t = \sigma(W_{Ch}h_{t-1} + W_{Cx}x_t + b_C)$
4. $C_t = f_t \circ C_{t-1} + i_t \circ \tilde{C}_t$
5. $\boxed{o_t = \sigma(W_{oC}C_{t-1} + W_{oh}h_{t-1} + W_{ox}x_t + b_o)}$
6. $h_t = o_t \circ \tanh(C_t)$

$z_{19} = W_{oC}C_{t-1}$
$z_{20} = W_{oh}h_{t-1}$
$z_{21} = z_{19} + z_{20}$
$z_{22} = W_{ox}x_t$
$z_{23} = z_{21} + z_{22}$
$z_{24} = z_{23} + b_o$
$o_t = \sigma(z_{24})$

- Lets rewrite these in terms of unary and binary operations

LSTM

15. $z_{13}=W_{Ch}h_{t-1}$
16. $z_{14}=W_{Cx}x_t$
17. $z_{15}=z_{13}+z_{14}$
18. $z_{16}=z_{15}+b_C$
19. $\tilde{C}_t=\sigma(z_{16})$
20. $z_{17}=f_t \circ C_{t-1}$
21. $z_{18}=i_t \circ \tilde{C}_t$
22. $C_t=z_{17}+z_{18}$
23. $z_{19}=W_{oC}C_{t-1}$
24. $z_{20}=W_{oh}h_{t-1}$
25. $z_{21}=z_{19}+z_{20}$
26. $z_{22}=W_{ox}x_t$
27. $z_{23}=z_{21}+z_{22}$
28. $z_{24}=z_{23}+b_o$
29. $o_t=\sigma(z_{24})$

LSTM

1. $f_t = \sigma(W_{fC}C_{t-1} + W_{fh}h_{t-1} + W_{fx}x_t + b_f)$
2. $i_t = \sigma(W_{iC}C_{t-1} + W_{ih}h_{t-1} + W_{ix}x_t + b_i)$
3. $\tilde{C}_t = \sigma(W_{Ch}h_{t-1} + W_{Cx}x_t + b_C)$
4. $C_t = f_t \circ C_{t-1} + i_t \circ \tilde{C}_t$
5. $o_t = \sigma(W_{oC}C_{t-1} + W_{oh}h_{t-1} + W_{ox}x_t + b_o)$
6. $\boxed{h_t = o_t \circ \tanh(C_t)}$

$z_{25} = \tanh(C_t)$
$h_t = o_t \circ z_{25}$

- Lets rewrite these in terms of unary and binary operations

LSTM

15. $z_{13}=W_{Ch}h_{t-1}$
16. $z_{14}=W_{Cx}x_t$
17. $z_{15}=z_{13}+z_{14}$
18. $z_{16}=z_{15}+b_C$
19. $\tilde{C}_t=\sigma(z_{16})$
20. $z_{17}=f_t \circ C_{t-1}$
21. $z_{18}=i_t \circ \tilde{C}_t$
22. $C_t=z_{17}+z_{18}$
23. $z_{19}=W_{oC}C_{t-1}$
24. $z_{20}=W_{oh}h_{t-1}$
25. $z_{21}=z_{19}+z_{20}$
26. $z_{22}=W_{ox}x_t$
27. $z_{23}=z_{21}+z_{22}$
28. $z_{24}=z_{23}+b_o$
29. $o_t=\sigma(z_{24})$
30. $z_{25}=\tanh(C_t)$
31. $h_t = o_t \circ z_{25}$

LSTM forward

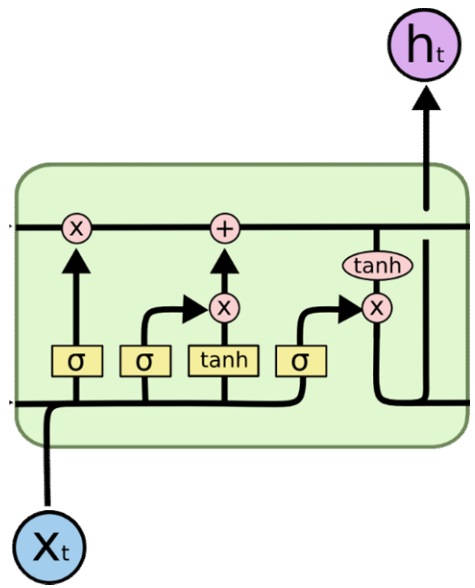

- The full forward computation of the LSTM can be performed by computing Equations 1-31 in sequence

- Every one of these equations is unary or binary

LSTM

1. $z_1 = W_{fC} C_{t-1}$
2. $z_2 = W_{fh} h_{t-1}$
3. $z_3 = z_1 + z_2$
4. $z_4 = W_{fx} x_t$
5. $z_5 = z_3 + z_4$
6. $z_6 = z_5 + b_f$
7. $f_t = \sigma(z_6)$
8. $z_7 = W_{iC} C_{t-1}$
9. $z_8 = W_{ih} h_{t-1}$
10. $z_9 = z_7 + z_8$
11. $z_{10} = W_{ix} x_t$
12. $z_{11} = z_9 + z_{10}$
13. $z_{12} = z_{11} + b_i$
14. $i_t = \sigma(z_{12})$

LSTM

15. $z_{13}=W_{Ch}h_{t-1}$
16. $z_{14}=W_{Cx}x_t$
17. $z_{15}=z_{13}+z_{14}$
18. $z_{16}=z_{15}+b_C$
19. $\tilde{C}_t=\sigma(z_{16})$
20. $z_{17}=f_t \circ C_{t-1}$
21. $z_{18}=i_t \circ \tilde{C}_t$
22. $C_t=z_{17}+z_{18}$
23. $z_{19}=W_{oC}C_{t-1}$
24. $z_{20}=W_{oh}h_{t-1}$
25. $z_{21}=z_{19}+z_{20}$
26. $z_{22}=W_{ox}x_t$
27. $z_{23}=z_{21}+z_{22}$
28. $z_{24}=z_{23}+b_o$
29. $o_t=\sigma(z_{24})$
30. $z_{25}=\tanh(C_t)$
31. $h_t = o_t \circ z_{25}$

Computing derivatives

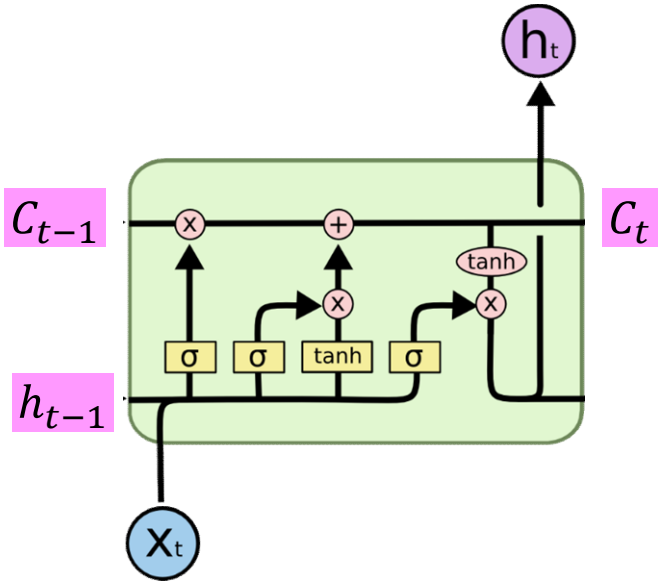

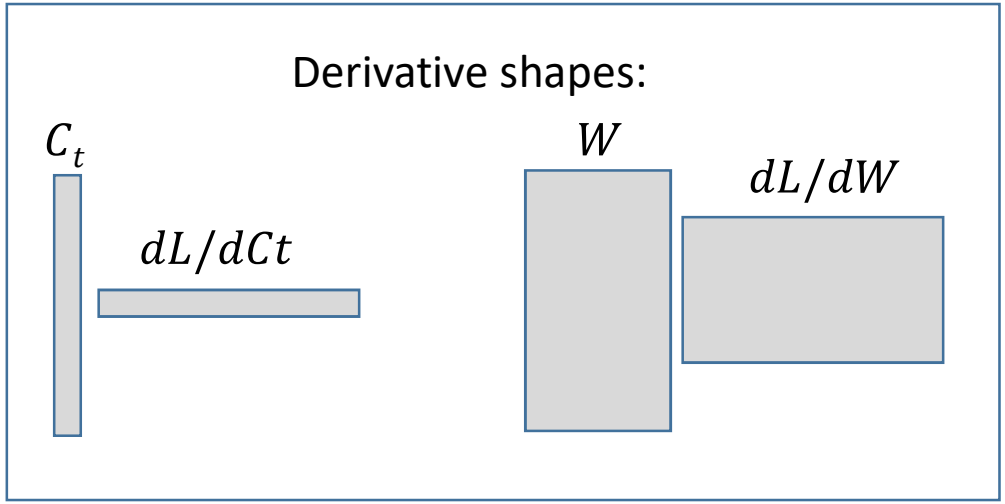

- We will now work our way backward
- We assume derivatives $\frac{dL}{dh_t}$ and $\frac{dL}{dC_t}$ of the loss w.r.t h_t and C_t are given
- We must compute $\frac{dL}{dC_{t-1}}$, $\frac{dL}{dh_{t-1}}$ and $\frac{dL}{dx_t}$
  - And also derivatives w.r.t the parameters within the cell
- Recall: the shape of the derivative for any variable will be transposed with respect to that variable

LSTM

1. $\nabla_{o_t} L = \nabla_{h_t} L \circ z_{25}^T$
2. $\nabla_{z_{25}} L = \nabla_{h_t} L \circ o_t^T$

23. $z_{19} = W_{oC} C_{t-1}$
24. $z_{20} = W_{oh} h_{t-1}$
25. $z_{21} = z_{19} + z_{20}$
26. $z_{22} = W_{ox} x_t$
27. $z_{23} = z_{21} + z_{22}$
28. $z_{24} = z_{23} + b_o$
29. $o_t = \sigma(z_{24})$
30. $z_{25} = \tanh(C_t)$
31. $h_t = o_t \circ z_{25}$

LSTM

1. $\nabla_{o_t} L = \nabla_{h_t} L \circ z_{25}^T$
2. $\nabla_{z_{25}} L = \nabla_{h_t} L \circ o_t^T$
3. $\nabla_{C_t} L = \nabla_{z_{25}} L \circ (1 - \tanh^2(C_t))^T$

23. $z_{19} = W_{oC} C_{t-1}$
24. $z_{20} = W_{oh} h_{t-1}$
25. $z_{21} = z_{19} + z_{20}$
26. $z_{22} = W_{ox} x_t$
27. $z_{23} = z_{21} + z_{22}$
28. $z_{24} = z_{23} + b_o$
29. $o_t = \sigma(z_{24})$
30. $z_{25} = \tanh(C_t)$
31. $h_t = o_t \circ z_{25}$

LSTM

1. $\nabla_{o_t} L = \nabla_{h_t} L \circ z_{25}^T$
2. $\nabla_{z_{25}} L = \nabla_{h_t} L \circ o_t^T$
3. $\nabla_{C_t} L = \nabla_{z_{25}} L \circ (1 - \tanh^2(C_t))^T$
4. $\nabla_{z_{24}} L = \nabla_{o_t} L \circ \sigma(z_{24})^T \circ (1 - \sigma(z_{24}))^T$

23. $z_{19} = W_{oC} C_{t-1}$
24. $z_{20} = W_{oh} h_{t-1}$
25. $z_{21} = z_{19} + z_{20}$
26. $z_{22} = W_{ox} x_t$
27. $z_{23} = z_{21} + z_{22}$
28. $z_{24} = z_{23} + b_o$
29. $o_t = \sigma(z_{24})$
30. $z_{25} = \tanh(C_t)$
31. $h_t = o_t \circ z_{25}$

LSTM

1. $\nabla_{o_t} L = \nabla_{h_t} L \circ z_{25}^T$
2. $\nabla_{z_{25}} L = \nabla_{h_t} L \circ o_t^T$
3. $\nabla_{C_t} L = \nabla_{z_{25}} L \circ (1 - \tanh^2(C_t))^T$
4. $\nabla_{z_{24}} L = \nabla_{o_t} L \circ \sigma(z_{24})^T \circ (1 - \sigma(z_{24}))^T$
5. $\nabla_{z_{23}} L = \nabla_{z_{24}} L$
6. $\nabla_{b_o} L = \nabla_{z_{24}} L$

23. $z_{19} = W_{oC} C_{t-1}$
24. $z_{20} = W_{oh} h_{t-1}$
25. $z_{21} = z_{19} + z_{20}$
26. $z_{22} = W_{ox} x_t$
27. $z_{23} = z_{21} + z_{22}$
28. $z_{24} = z_{23} + b_o$
29. $o_t = \sigma(z_{24})$
30. $z_{25} = \tanh(C_t)$
31. $h_t = o_t \circ z_{25}$

Equations highlighted in yellow show derivatives w.r.t. parameters

LSTM

7. $\nabla_{z_{22}} L = \nabla_{z_{23}} L$
8. $\nabla_{z_{21}} L = \nabla_{z_{23}} L$

23. $z_{19} = W_{oC} C_{t-1}$
24. $z_{20} = W_{oh} h_{t-1}$
25. $z_{21} = z_{19} + z_{20}$
26. $z_{22} = W_{ox} x_t$
27. $z_{23} = z_{21} + z_{22}$
28. $z_{24} = z_{23} + b_o$
29. $o_t = \sigma(z_{24})$
30. $z_{25} = \tanh(C_t)$
31. $h_t = o_t \circ z_{25}$

LSTM

7. $\nabla_{z_{22}} L = \nabla_{z_{23}} L$
8. $\nabla_{z_{21}} L = \nabla_{z_{23}} L$
9. $\boxed{\nabla_{W_{ox}} L = x_t \nabla_{z_{22}} L}$
10. $\nabla_{x_t} L = \nabla_{z_{22}} L W_{ox}$

23. $z_{19} = W_{oC} C_{t-1}$
24. $z_{20} = W_{oh} h_{t-1}$
25. $z_{21} = z_{19} + z_{20}$
26. $z_{22} = W_{ox} x_t$
27. $z_{23} = z_{21} + z_{22}$
28. $z_{24} = z_{23} + b_o$
29. $o_t = \sigma(z_{24})$
30. $z_{25} = \tanh(C_t)$
31. $h_t = o_t \circ z_{25}$

LSTM

7. $\nabla_{z_{22}} L = \nabla_{z_{23}} L$
8. $\nabla_{z_{21}} L = \nabla_{z_{23}} L$
9. $\boxed{\nabla_{W_{ox}} L = x_t \nabla_{z_{22}} L}$
10. $\nabla_{x_t} L = \nabla_{z_{22}} L W_{ox}$
11. $\nabla_{z_{20}} L = \nabla_{z_{21}} L$
12. $\nabla_{z_{19}} L = \nabla_{z_{21}} L$

23. $z_{19} = W_{oC} C_{t-1}$
24. $z_{20} = W_{oh} h_{t-1}$
25. $z_{21} = z_{19} + z_{20}$
26. $z_{22} = W_{ox} x_t$
27. $z_{23} = z_{21} + z_{22}$
28. $z_{24} = z_{23} + b_o$
29. $o_t = \sigma(z_{24})$
30. $z_{25} = \tanh(C_t)$
31. $h_t = o_t \circ z_{25}$

LSTM

7. $\nabla_{z_{22}} L = \nabla_{z_{23}} L$
8. $\nabla_{z_{21}} L = \nabla_{z_{23}} L$
9. $\boxed{\nabla_{W_{ox}} L = x_t \nabla_{z_{22}} L}$
10. $\nabla_{x_t} L = \nabla_{z_{22}} L W_{ox}$
11. $\nabla_{z_{20}} L = \nabla_{z_{21}} L$
12. $\nabla_{z_{19}} L = \nabla_{z_{21}} L$
13. $\boxed{\nabla_{W_{oh}} L = h_{t-1} \nabla_{z_{20}} L}$
14. $\nabla_{h_{t-1}} L = \nabla_{z_{20}} L W_{oh}$

23. $z_{19} = W_{oC} C_{t-1}$
24. $z_{20} = W_{oh} h_{t-1}$
25. $z_{21} = z_{19} + z_{20}$
26. $z_{22} = W_{ox} x_t$
27. $z_{23} = z_{21} + z_{22}$
28. $z_{24} = z_{23} + b_o$
29. $o_t = \sigma(z_{24})$
30. $z_{25} = \tanh(C_t)$
31. $h_t = o_t \circ z_{25}$

LSTM

7. $\nabla_{z_{22}} L = \nabla_{z_{23}} L$
8. $\nabla_{z_{21}} L = \nabla_{z_{23}} L$
9. $\boxed{\nabla_{W_{ox}} L = x_t \nabla_{z_{22}} L}$
10. $\nabla_{x_t} L = \nabla_{z_{22}} L W_{ox}$
11. $\nabla_{z_{20}} L = \nabla_{z_{21}} L$
12. $\nabla_{z_{19}} L = \nabla_{z_{21}} L$
13. $\boxed{\nabla_{W_{oh}} L = h_{t-1} \nabla_{z_{20}} L}$
14. $\nabla_{h_{t-1}} L = \nabla_{z_{20}} L W_{oh}$
15. $\boxed{\nabla_{W_{oC}} L = C_{t-1} \nabla_{z_{19}} L}$
16. $\nabla_{C_{t-1}} L = \nabla_{z_{19}} L W_{oC}$

23. $z_{19} = W_{oC} C_{t-1}$
24. $z_{20} = W_{oh} h_{t-1}$
25. $z_{21} = z_{19} + z_{20}$
26. $z_{22} = W_{ox} x_t$
27. $z_{23} = z_{21} + z_{22}$
28. $z_{24} = z_{23} + b_o$
29. $o_t = \sigma(z_{24})$
30. $z_{25} = \tanh(C_t)$
31. $h_t = o_t \circ z_{25}$

LSTM

15. $z_{13}=W_{Ch}h_{t-1}$
16. $z_{14}=W_{Cx}x_t$
17. $z_{15}=z_{13}+z_{14}$
18. $z_{16}=z_{15}+b_C$
19. $\tilde{C}_t=\sigma(z_{16})$
20. $z_{17}=f_t \circ C_{t-1}$
21. $z_{18}=i_t \circ \tilde{C}_t$
22. $C_t=z_{17}+z_{18}$

7. $\nabla_{z_{18}} L = \nabla_{C_t} L$
8. $\nabla_{z_{17}} L = \nabla_{C_t} L$

LSTM

15. $z_{13}=W_{Ch}h_{t-1}$
16. $z_{14}=W_{Cx}x_t$
17. $z_{15}=z_{13}+z_{14}$
18. $z_{16}=z_{15}+b_C$
19. $\tilde{C}_t=\sigma(z_{16})$
20. $z_{17}=f_t \circ C_{t-1}$
21. $z_{18}=i_t \circ \tilde{C}_t$
22. $C_t=z_{17}+z_{18}$

7. $\nabla_{z_{18}} L = \nabla_{C_t} L$
8. $\nabla_{z_{17}} L = \nabla_{C_t} L$
9. $\nabla_{i_t} L = \nabla_{z_{18}} L \circ \tilde{C}_t^T$
10. $\nabla_{\tilde{C}_t} L = \nabla_{z_{18}} L \circ i_t^T$

LSTM

15. $z_{13} = W_{Ch} h_{t-1}$
16. $z_{14} = W_{Cx} x_t$
17. $z_{15} = z_{13} + z_{14}$
18. $z_{16} = z_{15} + b_C$
19. $\tilde{C}_t = \sigma(z_{16})$
20. $z_{17} = f_t \circ C_{t-1}$
21. $z_{18} = i_t \circ \tilde{C}_t$
22. $C_t = z_{17} + z_{18}$

7. $\nabla_{z_{18}} L = \nabla_{C_t} L$
8. $\nabla_{z_{17}} L = \nabla_{C_t} L$
9. $\nabla_{i_t} L = \nabla_{z_{18}} L \circ \tilde{C}_t^T$
10. $\nabla_{\tilde{C}_t} L = \nabla_{z_{18}} L \circ i_t^T$
11. $\nabla_{C_{t-1}} L \mathrel{+}= \nabla_{z_{17}} L \circ f_t^T$
12. $\nabla_{f_t} L = \nabla_{z_{17}} L \circ C_{t-1}^T$

Second time we're computing a derivative for C_{t-1}, so we *increment* the derivative ("+=")

LSTM

15. $z_{13}=W_{Ch}h_{t-1}$
16. $z_{14}=W_{Cx}x_t$
17. $z_{15}=z_{13}+z_{14}$
18. $z_{16}=z_{15}+b_C$
19. $\tilde{C}_t=\sigma(z_{16})$
20. $z_{17}=f_t \circ C_{t-1}$
21. $z_{18}=i_t \circ \tilde{C}_t$
22. $C_t=z_{17}+z_{18}$

7. $\nabla_{z_{18}} L = \nabla_{C_t} L$
8. $\nabla_{z_{17}} L = \nabla_{C_t} L$
9. $\nabla_{i_t} L = \nabla_{z_{18}} L \circ \tilde{C}_t^T$
10. $\nabla_{\tilde{C}_t} L = \nabla_{z_{18}} L \circ i_t^T$
11. $\nabla_{C_{t-1}} L \mathrel{+}= \nabla_{z_{17}} L \circ f_t^T$
12. $\nabla_{f_t} L = \nabla_{z_{17}} L \circ C_{t-1}^T$
13. $\nabla_{z_{16}} L = \nabla_{\tilde{C}_t} L \circ \sigma(z_{16})^T \circ (1-\sigma(z_{16}))^T$

LSTM

15. $z_{13}=W_{Ch}h_{t-1}$
16. $z_{14}=W_{Cx}x_t$
17. $z_{15}=z_{13}+z_{14}$
18. $z_{16}=z_{15}+b_C$
19. $\tilde{C}_t=\sigma(z_{16})$
20. $z_{17}=f_t \circ C_{t-1}$
21. $z_{18}=i_t \circ \tilde{C}_t$
22. $C_t=z_{17}+z_{18}$

14. $\nabla_{b_C} L = \nabla_{z_{16}} L$
15. $\nabla_{z_{15}} L = \nabla_{z_{16}} L$

LSTM

15. $z_{13}=W_{Ch}h_{t-1}$
16. $z_{14}=W_{Cx}x_t$
17. $z_{15}=z_{13}+z_{14}$
18. $z_{16}=z_{15}+b_C$
19. $\tilde{C}_t=\sigma(z_{16})$
20. $z_{17}=f_t \circ C_{t-1}$
21. $z_{18}=i_t \circ \tilde{C}_t$
22. $C_t=z_{17}+z_{18}$

14. $\nabla_{b_C} L = \nabla_{z_{16}} L$
15. $\nabla_{z_{15}} L = \nabla_{z_{16}} L$
16. $\nabla_{b_C} L = \nabla_{z_{16}} L$
17. $\nabla_{z_{15}} L = \nabla_{z_{16}} L$

LSTM

15. $z_{13}=W_{Ch}h_{t-1}$
16. $z_{14}=W_{Cx}x_t$
17. $z_{15}=z_{13}+z_{14}$
18. $z_{16}=z_{15}+b_C$
19. $\tilde{C}_t=\sigma(z_{16})$
20. $z_{17}=f_t \circ C_{t-1}$
21. $z_{18}=i_t \circ \tilde{C}_t$
22. $C_t=z_{17}+z_{18}$

14. $\nabla_{b_C} L = \nabla_{z_{16}} L$
15. $\nabla_{z_{15}} L = \nabla_{z_{16}} L$
16. $\nabla_{b_C} L = \nabla_{z_{16}} L$
17. $\nabla_{z_{15}} L = \nabla_{z_{16}} L$
18. $\nabla_{W_{Cx}} L = x_t \nabla_{z_{14}} L$
19. $\nabla_{x_t} L \mathrel{+}= \nabla_{z_{14}} L W_{Cx}$

Note the "+="

LSTM

15. $z_{13} = W_{Ch} h_{t-1}$
16. $z_{14} = W_{Cx} x_t$
17. $z_{15} = z_{13} + z_{14}$
18. $z_{16} = z_{15} + b_C$
19. $\tilde{C}_t = \sigma(z_{16})$
20. $z_{17} = f_t \circ C_{t-1}$
21. $z_{18} = i_t \circ \tilde{C}_t$
22. $C_t = z_{17} + z_{18}$

14. $\nabla_{b_C} L = \nabla_{z_{16}} L$
15. $\nabla_{z_{15}} L = \nabla_{z_{16}} L$
16. $\nabla_{b_C} L = \nabla_{z_{16}} L$
17. $\nabla_{z_{15}} L = \nabla_{z_{16}} L$
18. $\nabla_{W_{Cx}} L = x_t \nabla_{z_{14}} L$
19. $\nabla_{x_t} L \mathrel{+}= \nabla_{z_{14}} L W_{Cx}$
20. $\nabla_{W_{Ch}} L = h_{t-1} \nabla_{z_{14}} L$
21. $\nabla_{h_{t-1}} L \mathrel{+}= \nabla_{z_{13}} L W_{Ch}$

Note the "+="

Continuing the computation

- Continue the backward progression until the derivatives from forward Equation 1 have been computed
- At this point all derivatives will be computed.

Overall procedure

- Express the overall computation as a sequence of unary or binary operations
  - Can be automated
- Computes derivatives incrementally, going backward over the sequence of equations!

- Since each atomic computation is simple and belongs to one of a small set of possibilities, the conversion to derivatives is trivial once the computation is serialized as above

May be easier to think of it in terms of a "derivative" routine

- Define a routine that returns derivatives for unary and binary operations

- **SCALAR version (all variables are scalars)**

```
function deriv(dz, x, y, operator)
    case operator:
        'none' : return dx
        '*' : return y*dz, dz*x
        '+' : return dz, dz
        '-' : return dz, -dz
        # Single argument operations
        'tanh' : return dz(1-tanh²(x))
        'sigmoid' : return dz sigmoid(x) (1-sigmoid(x))
```

Derivative routine, vector version

- Note distinction between component-wise and matrix multiplies
- Observe also that matrix and vector dimensions are correctly handled (locally)
- "∘" is component-wise multiply
- "*" is matrix multiply

```
function deriv(dz, x, y, operator)
    case operator:
        'none' : return dx
        # component-wise "schur" multiply
        '∘' : return dz∘x^T, dz∘y^T
        # Matrix multiply. X must be a matrix
        '*' : return y*dz, dz*x
        '+' : return dz, dz
        '-' : return dz, -dz
        # The following will expect a single argument
        'tanh' : return dz∘(1-tanh^2(x))^T
        'sigmoid' : return dz∘sigmoid(x)^T∘(1-sigmoid(x))^T
        # The jacobian is the full derivative matrix of the sigmoid
        'softmax' : return dz*Jacobian(sigmoid,x)
```

When to use “=“ vs “+=“

- In the forward computation a variable may be used multiple times to compute other intermediate variables
- During backward computations, the first time the derivative is computed for the variable, the we will use “=“
- In subsequent computations we use “+=“
- It may be difficult to keep track of when we first compute the derivative for a variable
  - When to use “=“ vs when to use “+=“

- Cheap trick:
  - Initialize all derivatives to 0 during computation
  - *Always* use “+=“
  - You will get the correct answer (why?)

```
[dC_{t-1},dx_t,dh_{t-1},d[W,b]] = LSTM_derivative(dC_t dh_t)
    initialize d(variable)=0 (all variables)
    # Derivative of eq. 31 h_t = o_t ∘ z_25
    [do_t, dz_25] += deriv(dh_t,o_t,z_25,'∘')
    # Derivative of eq. 30 z_25=tanh(C_t)
    [dC_t] += deriv(dz_25,C_t,'tanh')
    # Derivative of eq. 29 o_t=σ(z_24)
    [dz_25] += deriv(do_t,z_25,'sigmoid')
    # Derivative of eq. 28 z_24=z_23+b_o
    [dz_23, db_o] += deriv(dz_24,z_23,b_o,'+')
    # Derivative of eq. 27 z_23=z_21+z_22
    [dz_21, dz_22] += deriv(dz_23,z_21,z_22,'+')
    # Derivative of eq. 26 z_22=W_ox x_t
    [dW_ox, dx_t] += deriv(dz_22,W_ox,x_t,'*')
    # Derivative of eq. 25 z_21=z_19+z_20
    [dz_19, dz_20] += deriv(dz_21,z_19,z_20,'+')
    # Derivative of eq. 24 z_20=W_oh h_{t-1}
    [dW_oh, dh_{t-1}] += deriv(dz_20,W_oh,h_{t-1},'*')
    # Derivative of eq. 23 z_19=W_oC C_{t-1}
    [dW_oC, dC_{t-1}] += deriv(dz_19,W_oC,C_{t-1},'*')
```

23. $z_{19}=W_{oC}C_{t-1}$
24. $z_{20}=W_{oh}h_{t-1}$
25. $z_{21}=z_{19}+z_{20}$
26. $z_{22}=W_{ox}x_t$
27. $z_{23}=z_{21}+z_{22}$
28. $z_{24}=z_{23}+b_o$
29. $o_t=\sigma(z_{24})$
30. $z_{25}=\tanh(C_t)$
31. $h_t = o_t \circ z_{25}$

… continued from previous slide

```
# Derivative of eq. 22 C_t=z_17+z_18
[dz_17, dz_18] += deriv(dC_t,z_18,z_18,'+')
# Derivative of eq. 21 z_18=i_t ∘ C̃_t
[di_t, dtildeC_t] += deriv(dz_18,i_t, dtildeC_t,'∘')
# Derivative of eq. 20 z_17=f_t ∘ C_t-1
[df_t, dC_t-1] += deriv(dz_17,f_t,C_t-1,'∘')
# Derivative of eq. 19 C̃_t=σ(z_16)
[dz_16] += deriv(dtildeC_t,'sigmoid')
# Derivative of eq. 18 z_16=z_15+b_C
[dz_15, db_C] += deriv(dz_16,z_15,b_C,'+')
# Derivative of eq. 17 z_15=z_13+z_14
[dz_13, dz_14] += deriv(dz_15,z_13,z_14,'+')
# Derivative of eq. 16 z_14=W_Cx x_t
[dW_Cx, dx_t] += deriv(dz_14,W_Cx,x_t,'*')
# Derivative of eq. 15 z_13=W_Ch h_t-1
[dW_Ch, dh_t-1] += deriv(dz_13,W_Ch,h_t-1,'*')
```

15. $z_{13}=W_{Ch}h_{t-1}$
16. $z_{14}=W_{Cx}x_t$
17. $z_{15}=z_{13}+z_{14}$
18. $z_{16}=z_{15}+b_C$
19. $\tilde{C}_t=\sigma(z_{16})$
20. $z_{17}=f_t \circ C_{t-1}$
21. $z_{18}=i_t \circ \tilde{C}_t$
22. $C_t=z_{17}+z_{18}$

… continued from previous slide

```
# Derivative of eq. 14 i_t=σ(z_12)
[dz_12] += deriv(di_t,'sigmoid')
# Derivative of eq. 13 z_12=z_11+b_f
[dz_11, db_i] += deriv(dz_12,z_11, b_i,'+')
# Derivative of eq. 12 z_11=z_9+z_10
[dz_9, dz_10] += deriv(dz_11,z_9,z_10,'+')
# Derivative of eq. 11 z_10=W_ix x_t
[dW_ix, dx_t] += deriv(dz_10,W_ix,x_t,'+')
# Derivative of eq. 10 z_9=z_7+z_8
[dz_7, dz_8] += deriv(dz_9,z_7,z_8,'+')
# Derivative of eq. 9 z_8=W_ih h_t-1
[dW_ih, dh_t-1] += deriv(dz_8,W_ih,h_t-1,'*')
# Derivative of eq. 8 z_7=W_iC C_t-1
[dW_iC, dC_t-1] += deriv(dz_7,W_iC,C_t-1,'*')
```

8. $z_7=W_{iC}C_{t-1}$
9. $z_8=W_{ih}h_{t-1}$
10. $z_9=z_7+z_8$
11. $z_{10}=W_{ix}x_t$
12. $z_{11}=z_9+z_{10}$
13. $z_{12}=z_{11}+b_i$
14. $i_t=\sigma(z_{12})$

… continued from previous slide

```
# Derivative of eq. 7 f_t=σ(z_6)
[dz_6] += deriv(df_t,'sigmoid')
# Derivative of eq. 6 z_6=z_5+b_f
[dz_5, db_f] += deriv(dz_6,z_5, b_f,'+')
# Derivative of eq. 5 z_5=z_3+z_4
[dz_3, dz_4] += deriv(dz_5,z_3,z_4,'+')
# Derivative of eq. 4 z_4=W_fx x_t
[dW_fx, dx_t] += deriv(dz_4,W_fx,x_t,'*')
# Derivative of eq. 3 z_3=z_1+z_2
[dz_1, dz_2] += deriv(dz_3,z_1,z_2,'+')
# Derivative of eq. 2 z_2=W_fh h_t-1
[dW_fh, dh_t-1] += deriv(dz_2,W_fh,h_t-1,'*')
# Derivative of eq. 1 z_1=W_fC C_t-1
[dW_fC, dC_t-1] += deriv(dz_7,W_fC,C_t-1,'*')

return dC_t-1, dh_t-1, dx_t, d[W,b]
```

1. $z_1=W_{fC}C_{t-1}$
2. $z_2=W_{fh}h_{t-1}$
3. $z_3=z_1+z_2$
4. $z_4=W_{fx}x_t$
5. $z_5=z_3+z_4$
6. $z_6=z_5+b_f$
7. $f_t=\sigma(z_6)$

Caveats

- The deriv() routine given is missing several operators
  - Operations involving constants ($z = 2y$, $z = 1-y$, $z = 3+y$)
  - Division and inversion (e.g $z = x/y$, $z = 1/y$, $z = A^{-1}$)
  - You may have to extend it to deal with these, or rewrite your equations to eliminate such operations if possible

- In practice many of the operations will be grouped together for computational efficiency
  - And to take advantage of parallel processing capabilities

- But the basic principle applies to *any* computation that can be expressed as a serial operation of unary and binary relations
  - If you can do it on a computer, you can express it as a serial operation

- In fact the preceding logic is *exactly* what we use to compute derivatives in backprop
  - We saw this explicitly in the vector version of BP for MLPs.